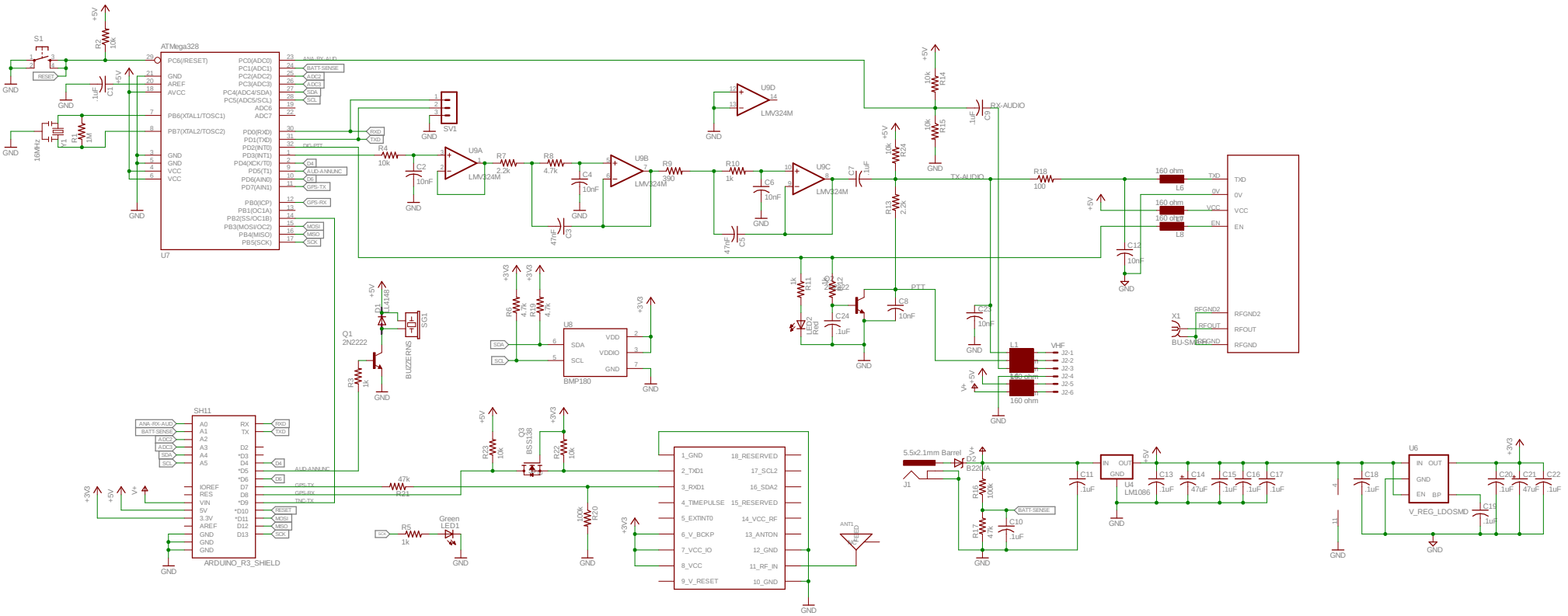
ATMega328
U7
S1
RESET
R2 10k
C1 1uF
X1 16MHz
R1 1M
SV1
R4 10k
C2 10nF
U9A LMV324M
R7 2.2k
R8 4.7k
C4 10nF
C3 47nF
U9B LMV324M
R9 390
R10 1k
C6 10nF
C5 47nF
U9C LMV324M
U9D LMV324M
C7 .1uF
R24 10k
R13 2.2k
R14 10k
R15 10k
C9 1uF
RX-AUDIO
TX-AUDIO
R18 100
L6 160 ohm
L8 160 ohm
C12 10nF
TXD
0V
VCC
EN
RFGND2
RFOUT
RFGND
X1 BU-SMB
L1 VHF
160 ohm
J2-1
J2-2
J2-3
J2-4
J2-5
J2-6
C22 10nF
PTT
C8 10nF
R11 1k
R12 1k
LED2 Red
C24 .1uF
D1 1N4148
SG1 BUZZERNS
Q1 2N2222
R3 1k
R6 4.7k
R5 4.7k
U8 BMP180
SDA
SCL
VDD
VDDIO
GND
SH11
ARDUINO_R3_SHIELD
ANA-RX-AUD
BATT-SENSE
ADC2
ADC3
SDA
SCL
RXD
TXD
D4
D6
AUD-ANNUNC
GPS-TX
GPS-RX
TNC-TX
RESET
MOSI
MISO
SCK
R21 47k
R23 10k
Q3 BSS138
R22 10k
R20 100k
R5 1k
Green LED1
1_GND
2_TXD1
3_RXD1
4_TIMEPULSE
5_EXTINT0
6_V_BCKP
7_VCC_IO
8_VCC
9_V_RESET
18_RESERVED
17_SCL2
16_SDA2
15_RESERVED
14_VCC_RF
13_ANTON
12_GND
11_RF_IN
10_GND
ANT1 Feed
5.5x2.1mm Barrel
J1
D2 B220A
R16 100k
R17 47k
C10 .1uF
C11 .1uF
U4 LM1086
C13 .1uF
C14 47uF
C15 .1uF
C16 .1uF
C17 .1uF
C18 .1uF
U6 V_REG_LDOSMD
C19 .1uF
C20 .1uF
C21 47uF
C22 .1uF
GND
+5V
+3V3
V+